Coaxial fixed attenuators are used in absorbing energy of transmission line, expanding power range and controlling power level, they are also used in accurately measuring power or spectrum of RF microwave transmitters accompany with small power meter, comprehensive tester or spectrum analyzer.

N serial coaxial fixed attenuators' average power 10W-10KW, frequency range DC-26.5GHz and feature wide frequency band, low VSWR, flatness attenuation value, excellent capacity in anti-pulse and anti-burnout.

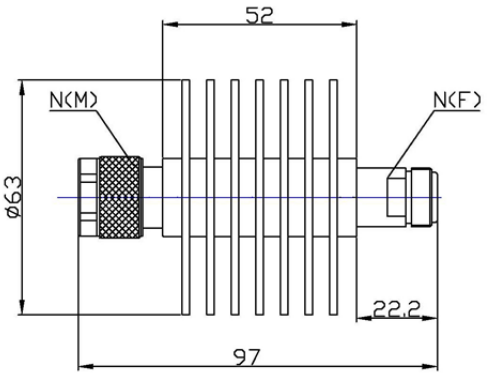

MECHANICAL SPECIFICATIONS	
Connectors	Brass Nickel Plated
Male Pin	Brass Gold Plated
Female Pin	Beryllium Copper Gold Plated
Housing	Aluminum, Black Anodize
Temp Range	-55° C ~ +125° C
Dimensions	Ø63×97mm
Weight	230g

RoHS Complient: Yes

ELECTRICAL SPECIFICATIONS

Model Number	Frequency Range(GHz)	Attenuation Value & Accuracy (dB)						Max VSWR
		10	20	30	40	50	60	
SAT27B50XX08GHD	DC-8	±0.4	±0.6	±0.5	±0.5	-1.0/+0.5	-1.0/+0.5	1.20
SAT27B50XX12GHD	DC-12.4	±0.5	±0.6	±0.8	±0.8	-1.0/+0.75	-1.0/+0.75	1.25
SAT27B50XX18GHD	DC-18	±1.0	±1.0	±1.0	±1.0	±1.0	±1.0	1.30

Note: XX refer to attenuation value in dB

NOMINAL IMPEDANCE: 50Ω

AVERAGE POWER: 50W average to 25°C ambient temperature, derated linearly to 5W @ 125°C.

PEAK POWER: 1KW (5μs pulse width with 5% duty cycle)

CONNECTOR TYPE: N

Notes:

1. Dimensions Tolerance ±5%
2. Custom designs available for other special attenuation value & accuracy.