Description: NMD2.92mm Female To NMD2.92mm Female Adapter

Outline drawing:

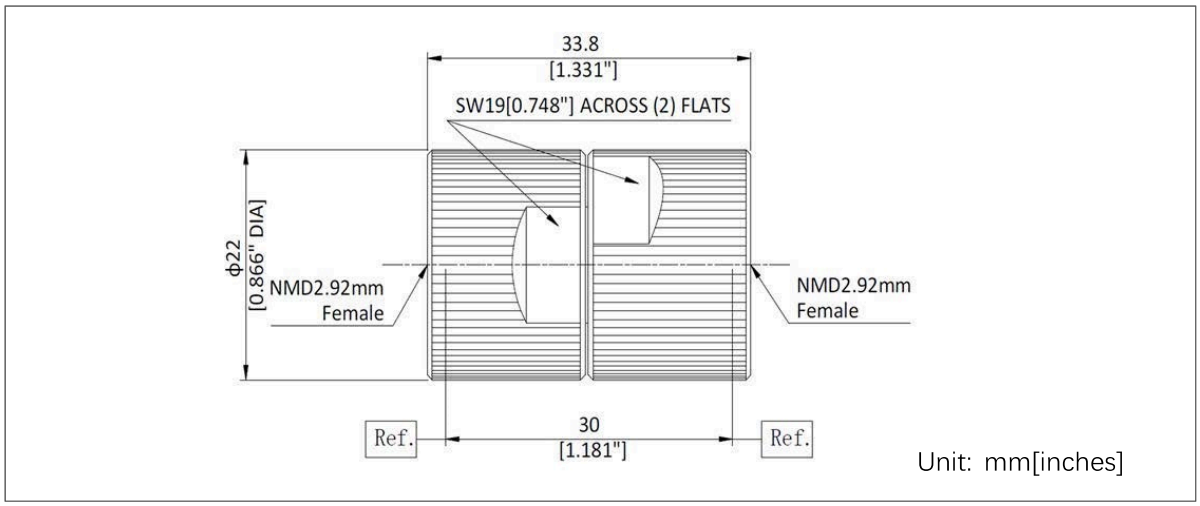

Type

	Connector 1	Connector 2
Port Type	NMD2.92mm Female	NMD2.92mm Female
Impedance	50Ω	50Ω
Body Style	Straight	

Material and Plating

Body	SUS303, Polished & Passivated
Center conductor	Beryllium Copper Gold Plated
Dielectric	PEEK

Electrical Specifications

Frequency Range	DC-40GHz
Max VSWR	1.20:1(max)

Mechanical Specifications

	Connector 1	Connector 2
Durability	> 2000 Cycles	> 2000 Cycles
Recommended Torque	0.9 Nm	0.9 Nm

Environmental Data

Operating Temperature Range	-55~+165℃
2002/95/EC(RoHS)	Compliant