Features

Frequency range: 0.1-10GHz
Wide-band, small size, 50ohm impedance
Standard hermetically sealed package
Operating Temperature: -55 to +85℃

Electrical Specification (50ohm Test System, Vcc=12V, T_A=-55 to +85℃)

Parameter	Symbol	Specification		Unit
		Nominal	Typical	
Center Frequency	f_L-f_H	0.1-6.0	0.1-10.0	GHz
Gain	Gp	10.0 min.	11.0	dB
Gain Flatness	△Gp	/	±0.5	dB
Noise Figure	Fn	7.0 max. △	4.9	dB
Input VSWR	VSWRi	2.0: 1 max.	1.5:1	/
Output VSWR	VSWRo	2.0: 1 max.	1.5:1	/
Output power	P-1	13.0 min. *△	14.0	dBm
Current:	Icc	/	55	mA

Remarks: 1. The specifications with △ are achieved at room temperature
2. The specifications with * are achieved at f=6.0GHz

Absolute Ratings

Max. Input power	+20dBm
Max. Storage Temperature	+125℃

Outline Drawing

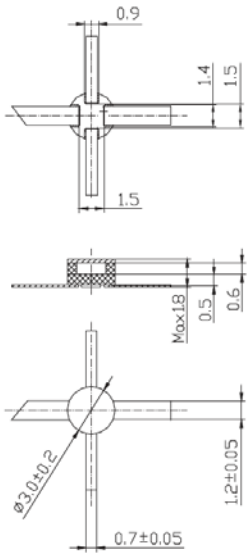

Unit: mm

ST32

Test Curves

Gain VS Frequency	VSWR VS Frequency
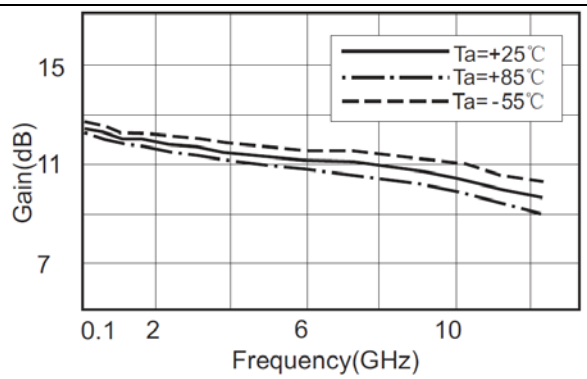	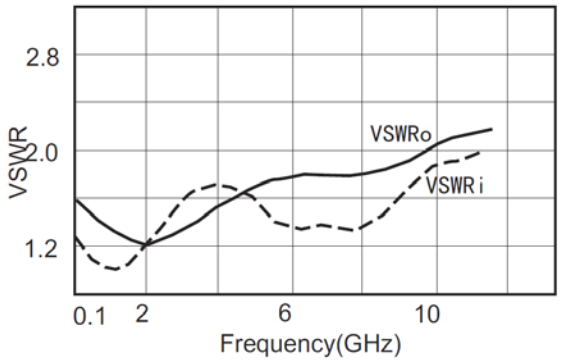
Noise Figure VS Frequency	**Power VS Frequency**
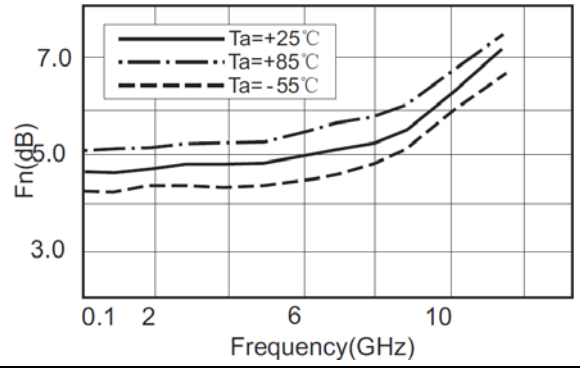	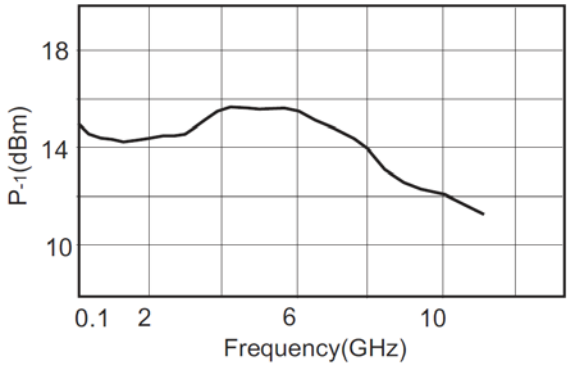

Application Instructions

1. Circuits should be connected according to the right diagram. C_1=3.3-22uF, C_2=1000pF, C_3=100-10000pF, which will be determined by operating frequency.
   Resistor R should be determined by Voltage. Inductor X_L>>50ohm.

VCC	10V	12V	15V
R	100ohm	140ohm	200ohm

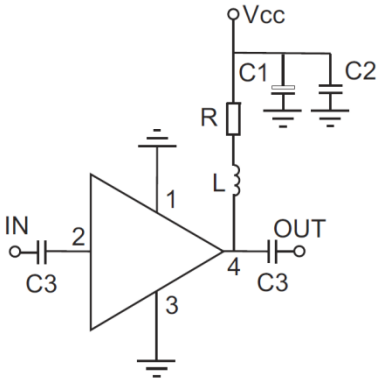

2. This device is ESD sensitive, Should notify ESD protection during using.
3. SMA package (SMA-1 Type) is also available
4. This device can't be used in high-reliable applications.