2-Port Waveguide Extender Connection Guide

COPPER MOUNTAIN® TECHNOLOGIES

What's Required:

- C42XX with S2VNA_v23.2 or newer software
- (2) FET-WR15, FET-WR12, or FET-WR10
- Set of RF cables (4 IF cables, 4 RF-LO cables)
- (2) DC Power Supplies
- WR-15, WR-12, or WR-10 cal kit
- Windows PC/Laptop

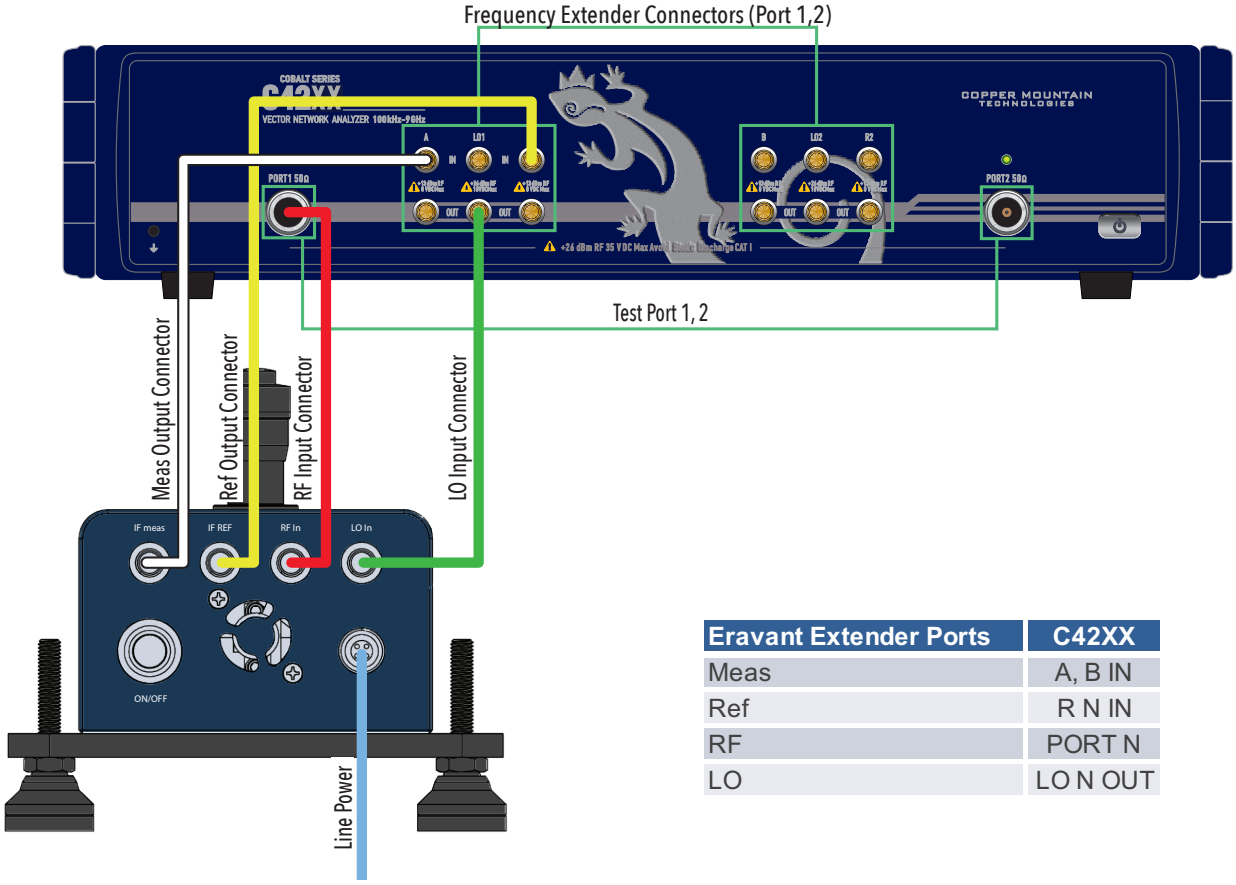

Eravant Extender Ports	C42XX
Meas	A, B IN
Ref	R N IN
RF	PORT N
LO	LO N OUT

IF TEST CobaltFx - A IN C42XX, IF REF CobaltFx – R1 IN C42XX (SMA cables)
RF INPUT CobaltFx– PORT 1 C42XX, LO INPUT CobaltFx– LO 1 OUT C42XX (3.5 mm cables)
USB cable for C42XX - laptop (omitted here)

Connect 2" ruggedized waveguide sections to waveguide port of each frequency extender

USA/Canada: +1.317.222.5400
EMEA: +44 75 03 68 21 13

631 E. New York St | Indianapolis, IN | 46202
www.coppermountaintech.com

APAC: +65.6323.6546
Latin America: +1.954.706.5920

4-Port Waveguide Extender Connection Guide

What's Required:

- C44XX with S4VNA_v23.2or newer software
- (4) FET-WR15, FET-WR12, or FET-WR10
- (2) Sets of RF cables (4 IF cables, 4 RF-LO cables)
- (4) Power Supplies
- WR-15, WR-12, or WR-10 cal kit
- Windows PC/Laptop

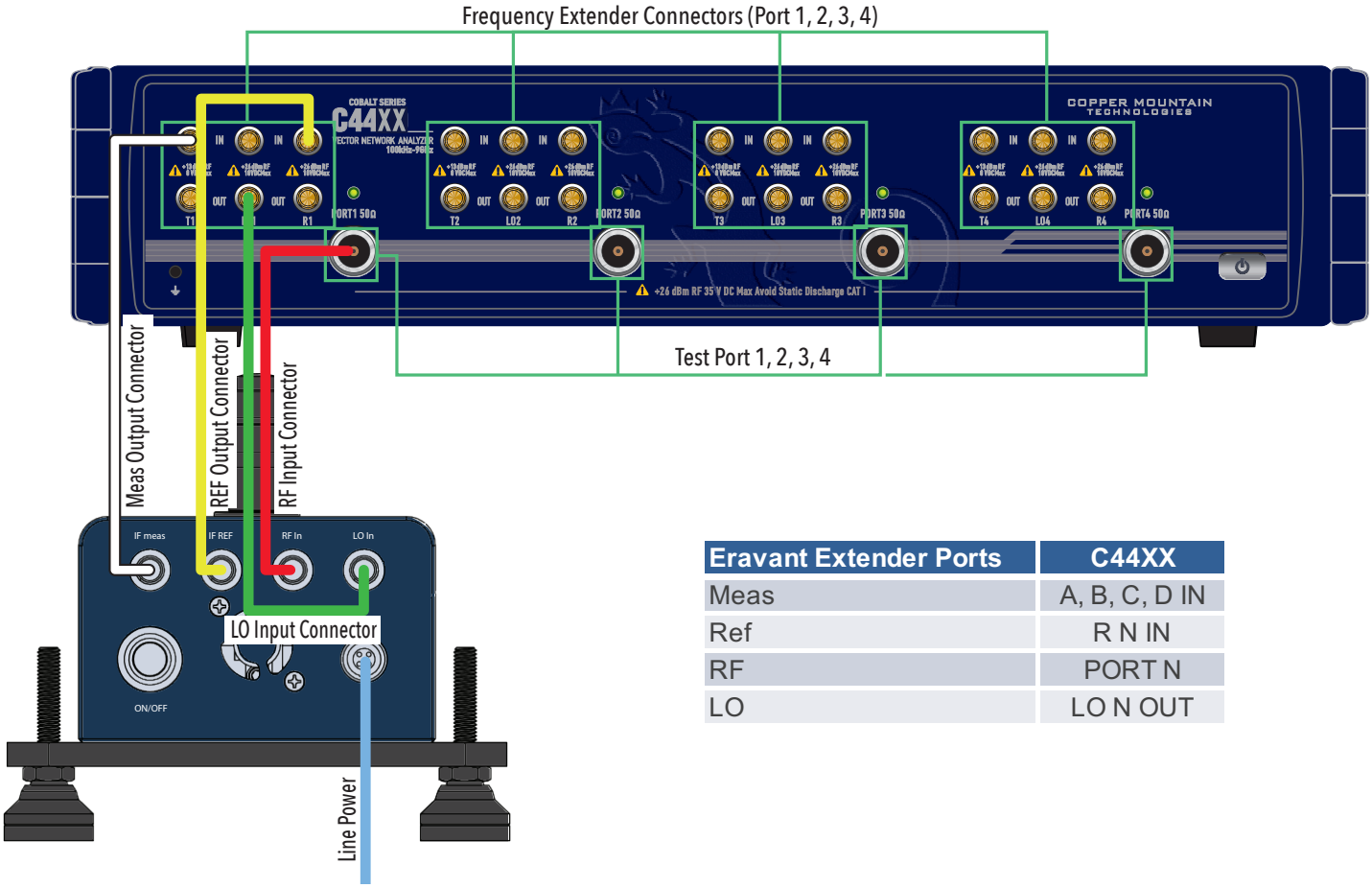

Eravant Extender Ports	C44XX
Meas	A, B, C, D IN
Ref	R N IN
RF	PORT N
LO	LO N OUT

IF TEST CobaltFx - A IN C44XX, IF REF CobaltFx – R1 IN C44XX (SMA cables)
RF INPUT CobaltFx– PORT 1 C44XX, LO INPUT CobaltFx– LO 1 OUT C44XX (SMA cables)
USB cable for C44XX - laptop (omitted here)

Connect 2" ruggedized waveguide sections to waveguide port of each frequency extender

USA/Canada: +1.317.222.5400
EMEA: +44 75 03 68 21 13

631 E. New York St | Indianapolis, IN | 46202
www.coppermountaintech.com

APAC: +65.6323.6546
Latin America: +1.954.706.5920

2-Port Coaxial Extenders Connection Guide

COPPER MOUNTAIN TECHNOLOGIES

What's Required:

- C42XX with S2VNA_v18.2.0 or newer software
- (2) FET1854 Modules
- Set of RF cables (4 IF cables, 2 RF cables, 2 LO cables)
- (2) DC cables
- T4311 or Z5411 calibration kit
- Windows PC/Laptop

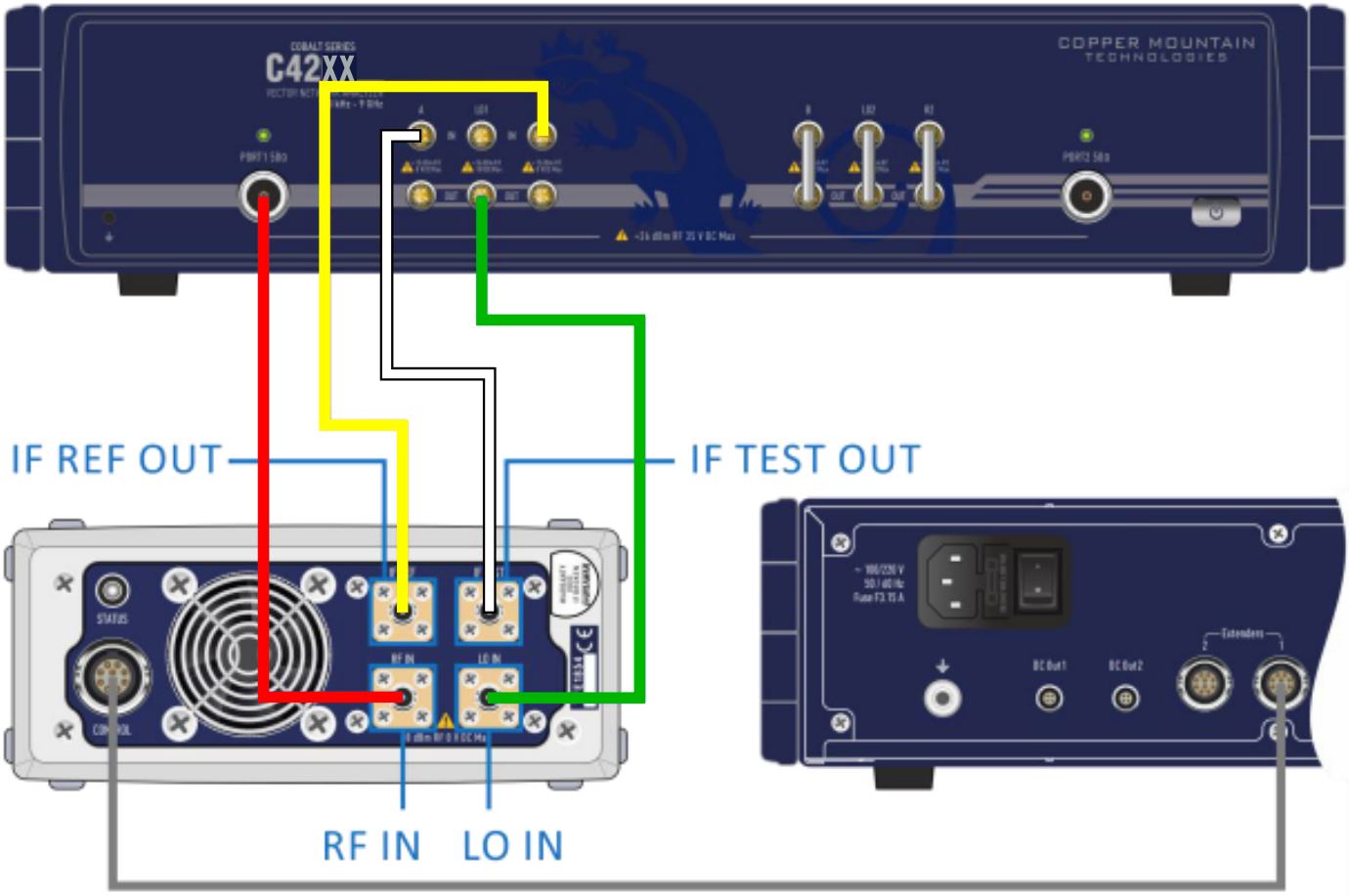

IF TEST CobaltFx - A IN C42XX, IF REF CobaltFx – R1 IN C42XX (N to SMA cables)
RF IN CobaltFx– PORT 1 C42XX, LO IN CobaltFx– LO 1 OUT C42XX (SMA cables)
USB cable for C42XX - laptop (omitted here)

USA/Canada: +1.317.222.5400
EMEA: +44 75 03 68 21 13

631 E. New York St | Indianapolis, IN | 46202
www.coppermountaintech.com

APAC: +65.6323.6546
Latin America: +1.954.706.5920

4-Port Coaxial Extenders Connection Guide

What's Required:

- C44XX with S2VNA_v18.2.0 or newer software
- (4) FET1854 Modules
- (2) Sets of RF cables (8 IF cables, 4 RF cables, 4 LO cables)
- (4) DC cables
- T4311 or Z5411 calibration kit
- Windows PC/Laptop

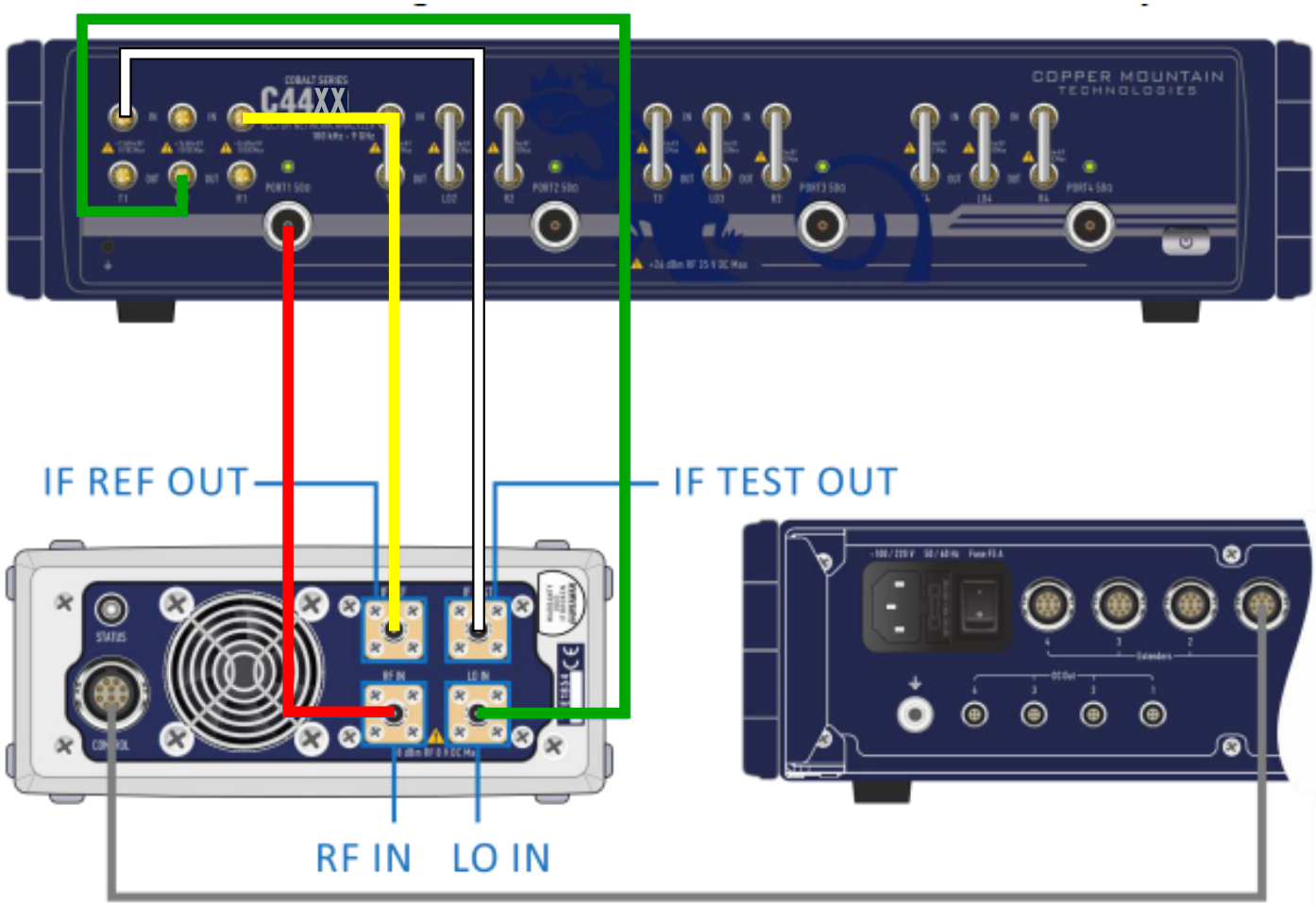

IF TEST CobaltFx - A IN C44XX, IF REF CobaltFx – R1 IN C44XX (N to SMA cables)
RF IN CobaltFx– PORT 1 C44XX, LO IN CobaltFx– LO 1 OUT C44XX (SMA cables)
USB cable for C44XX - laptop (omitted here)

USA/Canada: +1.317.222.5400
EMEA: +44 75 03 68 21 13

631 E. New York St | Indianapolis, IN | 46202
www.coppermountaintech.com

APAC: +65.6323.6546
Latin America: +1.954.706.5920